Electrolux PROFESSIONAL

High Productivity Cooking Electric Tilting Boiling Pan, 100lt , Freestanding

ITEM #

MODEL #

NAME #

SIS #

AIA #

586007 (PBOT10EGEO)	Electric tilting Boiling Pan 100lt (s), GuideYou panel, freestanding

Short Form Specification

Item No.

AISI 304 stainless steel construction. Deep drawn vessel in AISI 316 stainless steel. Insulated and counterbalanced lid. Motorized tilting with variable speed control. Pan can be tilted beyond 90° to completely empty the food. Food is uniformly heated via the base and the side walls of the pan by an indirect heating system using integrally generated saturated steam at a maximum temperature of 125°C in a jacket with an automatic deaeration system. Safety valve avoids overpressure of the steam in the jacket. Safety thermostat protects against low water level in the double jacket. TOUCH control panel. SOFT function. Possibility to store recipes in single or multiphase cooking process, with different temperature settings. Built in temperature sensors for precise control of cooking process. IPX6 water resistant. Configuration: Free-standing or Standing against a wall. Installation options (not included): floor mounted on 100mm high feet or a plinth which can be either steel or masonry construction.

APPROVAL:

Main Features

- Kettle is suitable to boil, steam, poach, braise or simmer all kinds of produce.
- Kettle is jacketed up to 134 mm from upper rim.
- Isolated upper well rim avoids risk of harm for the user.
- Ergonomic vessel dimensions, with a large diameter and shallow depth facilitates stirring and gentle food handling.
- Edge of the large pouring lip can be equipped with a strainer (option).
- Motorized, variable pan tilting with "SOFT STOP". Tilting and pouring speeds can be precisely adjusted. Pan can be tilted over 90° to facilitate pouring and cleaning operations.
- Built in temperature sensor to precisely control the cooking process.
- USB connection to easily update the software, upload/download recipes and download HACCP data.
- IPX6 water resistant.
- Max pressure of inner jacket at 1.7 bar; minimum working pressure at 1 bar. Allows temperature control between 50 and 110°C.

Construction

- Cooking vessel in 1.4435 (AISI 316L) stainless steel featuring directional pouring lip. Double-jacket in 1.4404 (AISI 316L) stainless steel designed to operate at a pressure of 1.5 bar.
- External panelling and internal frame made of 1.4301 (AISI 304) stainless steel.
- Double-lined insulated lid in 1.4301 (AISI 304) stainless steel mounted on the cross beam of the unit, counterbalanced by a hinge that remains open in all positions.
- Safety valve avoids overpressure of the steam in the double jacket.
- Safety thermostat protects against low water level in the double jacket.
- Ergonomic and user friendly thanks to the high tilting position and the pouring lip design which allow to easily fill containers.
- Water mixing tap is available as optional accessory to make water filling and pan cleaning easier.
- Front-mounted inclined led "TOUCH" control panel with recessed deep drawn casing, features self-explanatory display functions which guide operator throughout the cooking process: simultaneous display of actual and set temperature as well as set cooking time and remaining cooking time; real time clock; "SOFT" control for gentle heating up for delicate food; 9 power simmering levels from gentle to heavy boiling; timer for deferred

start; error display for quick trouble-shooting.

- Minimised presence of narrow gaps for easier cleaning of the sides to meet the highest hygiene standards.
- Can be prearranged for energy optimisation or external surveillance systems (optional).
- Possibility to store recipes in single or multiphase cooking process, with different temperature settings.
- 98% recyclable by weight; packaging material free of toxic substances.
- GuideYou Panel - activated by the user via settings – to easily follow the multiphase recipes, granting a proper and controlled cooking and a better appliance optimization.
  The system will provide maintenance reminders, in line with ESSENTIA program, helping the user to properly take care of the product, avoiding downtimes.
- Highly-visible and bright led TOUCH control panel features user-friendly icons and intuitive self-explanatory command options. Display visualizes:
  - Actual and set temperature
  - Set and remaining cooking time
  - Pre-heating phase (if activated)
  - GuideYou Panel (if activated)
  - Deferred start
  - Soft Function to reach the target temperature smoothly
  - 9 Power Control levels from simmering to fierce boiling
  - Pressure mode (in pressure models)
  - Stirrer ON/OFF settings (in round boiling models)
  - Error codes for quick trouble-shooting
  - Maintenance reminders

User Interface & Data Management

- Connectivity ready for real time access to connected appliances from remote and data monitoring (requires optional accessory – contact the Company for more details).

Optional Accessories

- Strainer for 100lt tilting boiling pans — PNC 910003 ❑
- Basket for 100lt boiling pans (diam. 600mm) — PNC 910023 ❑
- Base plate for 100lt boiling pans (diam. 628mm) — PNC 910033 ❑
- Measuring rod for 100lt tilting boiling pans — PNC 910044 ❑
- Strainer for dumplings for 100lt boiling pans — PNC 910054 ❑
- Scraper for dumpling strainer for boiling and braising pans — PNC 910058 ❑
- Food tap strainer rod for stationary round boiling pans — PNC 910162 ❑
- Stainless steel plinth for tilting units - against wall - factory fitted — PNC 911417 ❑
- Stainless steel plinth for tilting units - freestanding - factory fitted — PNC 911447 ❑
- Bottom plate with 2 feet, 100mm for tilting units (height 800mm) - factory fitted — PNC 911929 ❑
- FOOD TAP STRAINER - PBOT — PNC 911966 ❑
- C-board (length 1200mm) for tilting units - factory fitted — PNC 912184 ❑
- Power Socket, CEE16, built-in, 16A/400V, IP67, red-white - factory fitted — PNC 912468 ❑
- Power Socket, CEE32, built-in, 32A/400V, IP67, red-white - factory fitted — PNC 912469 ❑
- Power Socket, SCHUKO, built-in, 16A/230V, IP68, blue-white - factory fitted — PNC 912470 ❑
- Power Socket, TYP23, built-in, 16A/230V, IP55, black - factory fitted — PNC 912471 ❑
- Power Socket, TYP25, built-in, 16A/400V, IP55, black - factory fitted — PNC 912472 ❑
- Power Socket, SCHUKO, built-in, 16A/230V, IP55, black - factory fitted — PNC 912473 ❑
- Power Socket, CEE16, built-in, 16A/230V, IP67, blue-white - factory fitted — PNC 912474 ❑
- Power Socket, TYP23, built-in, 16A/230V, IP54, blue - factory fitted — PNC 912475 ❑
- Power Socket, SCHUKO, built-in, 16A/230V, IP54, blue - factory fitted — PNC 912476 ❑
- Power Socket, TYP25, built-in, 16A/400V, IP54, red-white - factory fitted — PNC 912477 ❑
- Panelling for plinth recess (depth from 70 to 270mm) for tilting units - factory fitted (Deutschland, Austria, Switzerland) - factory fitted — PNC 912479 ❑
- Manometer for tilting boiling pans - factory fitted — PNC 912490 ❑
- Connecting rail kit for appliances with backsplash, 900mm — PNC 912499 ❑
- Connecting rail kit, 900mm — PNC 912502 ❑
- Automatic water filling (hot and cold) for tilting units - to be ordered with water mixer - factory fitted — PNC 912735 ❑
- Kit energy optimization and potential free contact - factory fitted — PNC 912737 ❑
- Mainswitch 60A, 6mm² - factory fitted — PNC 912740 ❑
- Rear closing kit for tilting units - against wall - factory fitted — PNC 912750 ❑
- Rear closing kit for tilting units - island type - factory fitted — PNC 912756 ❑
- Lower rear backpanel for tilting units with or without backsplash - factory fitted — PNC 912768 ❑

The company reserves the right to make modifications to the products without prior notice. All information correct at time of printing.

• Spray gun for tilting units - freestanding (height 800mm) - factory fitted	PNC 912777	❑
• Food tap 2" for tilting boiling pans (PBOT) - factory fitted	PNC 912779	❑
• Emergency stop button - factory fitted	PNC 912784	❑
• Connecting rail kit: modular 90 (on the left) to ProThermetic tilting (on the right), ProThermetic stationary (on the left) to ProThermetic tilting (on the right)	PNC 912975	❑
• Connecting rail kit: modular 80 (on the right) to ProThermetic tilting (on the left), ProThermetic stationary (on the right) to ProThermetic tilting (on the left)	PNC 912976	❑
• Connecting rail kit for appliances with backsplash: modular 90 (on the left) to ProThermetic tilting (on the right), ProThermetic stationary (on the left) to ProThermetic tilting (on the right)	PNC 912981	❑
• Connecting rail kit for appliances with backsplash: modular 90 (on the right) to ProThermetic tilting (on the left), ProThermetic stationary (on the right) to ProThermetic tilting (on the left)	PNC 912982	❑
• Mixing tap with drip stop, two knobs, 815mm height, 600mm swivelling depth for PBOT/PFET - factory fitted	PNC 913554	❑
• Mixing tap with drip stop, two knobs, 815mm height, 450mm swivelling depth for PBOT/PFET - factory fitted	PNC 913555	❑
• Mixing tap with drip stop, two knobs, 685mm height, 600mm swivelling depth for PBOT/PFET - factory fitted	PNC 913556	❑
• Mixing tap with drip stop, two knobs, 685mm height, 450mm swivelling depth for PBOT/PFET - factory fitted	PNC 913557	❑
• Mixing tap with two knobs, 520mm height, 600mm swivelling depth for PXXT- KWC - factory fitted	PNC 913567	❑
• Mixing tap with one lever, 564mm height, 450mm swivelling depth for PXXT- KWC - factory fitted	PNC 913568	❑
• Connectivity kit for ProThermetic Boiling and Braising Pans ECAP - factory fitted	PNC 913577	❑

The company reserves the right to make modifications to the products without prior notice. All information correct at time of printing.

High Productivity Cooking Electric Tilting Boiling Pan, 100lt , Freestanding

Front

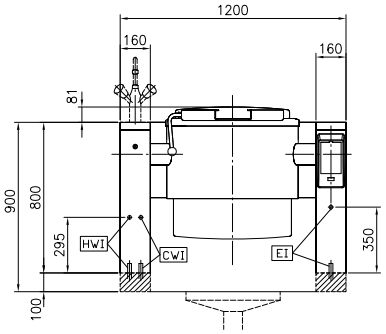

Side

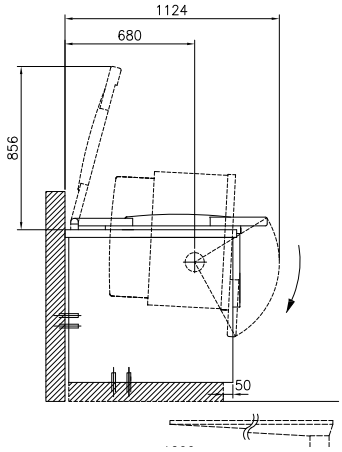

CWI1 = Cold Water inlet 1 (cleaning)
EI = Electrical inlet (power)
HWI = Hot water inlet

Top

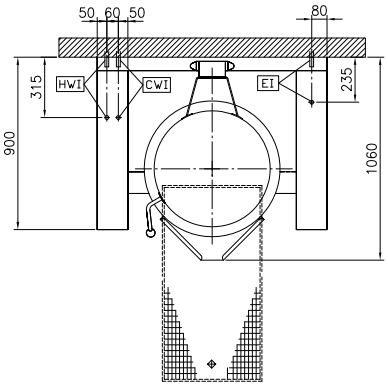

Electric

Supply voltage:	
586007 (PBOT10EGEO)	400 V/3N ph/50/60 Hz
Total Watts:	18.2 kW

Installation:

Type of installation:	FS on concrete base;FS on feet;On base;Standing against wall

Key Information:

Configuration:	Round;Tilting
Working Temperature MIN:	50 °C
Working Temperature MAX:	110 °C
Vessel (round) diameter:	640 mm
Vessel (round) depth:	395 mm
External dimensions, Width:	1200 mm
External dimensions, Depth:	900 mm
External dimensions, Height:	800 mm
Net weight:	180 kg
Net vessel useful capacity:	100 lt
Tilting mechanism:	Automatic
Double jacketed lid:	✓
Heating type:	Indirect

Energy Consumption

Standard:	
Item heated:	0 lt
Heat up temperature:	From 0°C to 0°C
Heat up time:	0 min

Sustainability

Energy consumed in heat up phase:	0
Energy efficiency:	0 %

The company reserves the right to make modifications to the products without prior notice. All information correct at time of printing.